3.5" TOUCH PANEL MINI Mobile DVR

DVR

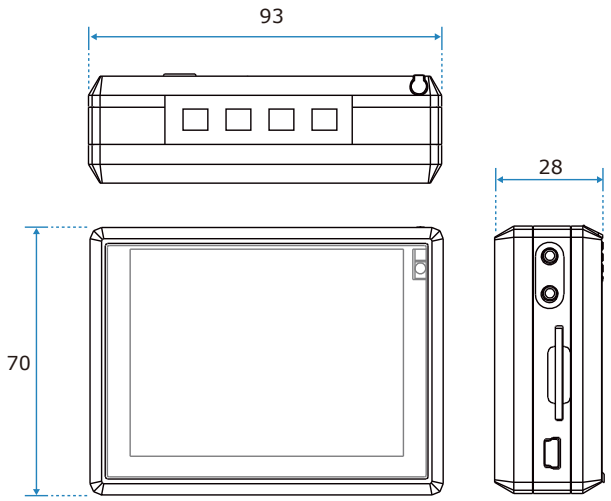

Unit : mm (± 0.5)

Feature

- Water- Resistant
- Display : 3.5" TFT
- SDHC : support up to 32GB SDHC
- IR Remote Control
- Record :
  Normal, loop overwrite ,
  Motion detect

Specification

Video Record			
(1) Compliant with MPEG-4 ISO/IEC 14496-2 , MPEG-4(AVI)			
(2) Audio Compression : ADPCM			
(3) Bit Rate Up to 3M bps			
(4) Video file format : AVI			
(5) Real time Record (AVI line in)			
(6) Video Record Quality	a. D1 : 720 x 480(16fps) b. VGA : 640 x 480(30fps) c. QVGA : 320 x 240 (30fps)		
(7) RTC Stamp embedded in Video stream			
(8) Real-time Record			
(9) Cross Line in Video stream			
(10) Motion Detect			
(11) LOOP circulate video recording			
(12) Support Schedule recording (4 programs setting)			
(13) Audio input select by user (from audio line in or built-in microphone , microphone only consider indoor use)			
Photo Snap Shut			
(1) Photo snap shut under preview mode.			
(2) File format : JEPG (VGA quality)			
I/O Interface			
(1) AV Line in with 2.5mm Phone Jack			
(2) AV Line out with 2.5mm Phone Jack			
(3) USB Jack 10pin (USB & Charging)			
(4) SD card slot SDHC			
(5) IR			
IR Key define			
(1) Power Off	(2) Volume increasing	(3) Volume decreasing	(4) Stop
(5) Up	(6) Left	(7) Right	(8) Down
(9) Play / Pause	(10) Video Record	(11) Snapshot	(12) Motion

MISUMI Manufacturer & Exporter
TEL:886-2-22266303 E-mail:mscctv@ms9.hinet.net
FAX:886-2-22225620 Web site: http://www.misumi.com.tw

Display
Touch PANEL 3.5" TFT LCD
(1)rechargeable Li-ion battery NP120 (2000mAh)
(2)Built-in charging circuit
(3)100~240V 50/60Hz AC adaptor , DC 5V~2A output power management
a. Auto Power off when system idle at 30 minutes (no work)
b. AV line in / out " Auto power off " will be disabled.
(4)Battery Status indicator
a. Full (100% 2hr)
b. Middle (50% 1hr)
c. Low battery (10% 10min) blinking for 30 seconds
d. Power off (5%) red led on and power off after 1min.
Storage
(1)Support SD card (Both support SD 1.0 & SD 2.0 (SDHC)
(2)Support SD memory up to 32G
(3)Support USB 1.1 & USB 2.0 to SD
Link to PC
(1)Support Windows 2000 / XP / VISTA
(2)Connect the USB cable from PC to device , directly exchange file from PC

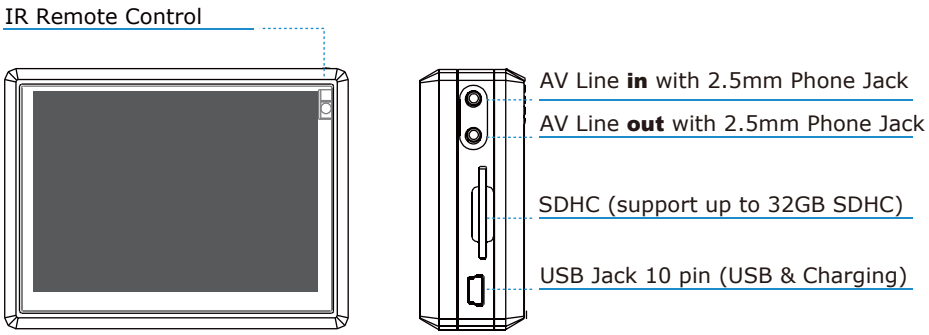

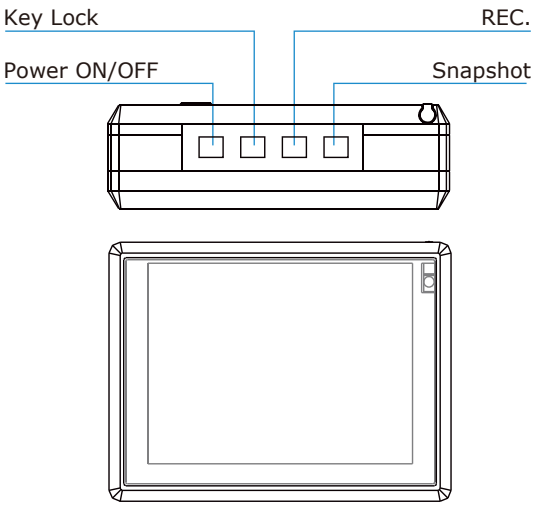

other information

MINI Mobile Digital Video Recorder

MP-300E

IR remote control
SD/SDHC card slot (**support 32 GB SDHC class 4 over**)
H.264 REC D1 720x480 VIDEO & Snapshot JPG IMAGE
loop overwrite record or continuous record
AV recorder resolution : 720x480(D1) / max 30 fps.
AV Line in/out with 2.5mm Phone Jack
detachable, rechargeable Li-ion battery **NP-60 (1030mAh)**
Dimension:95.5mm x 63.5 mm x 21 mm